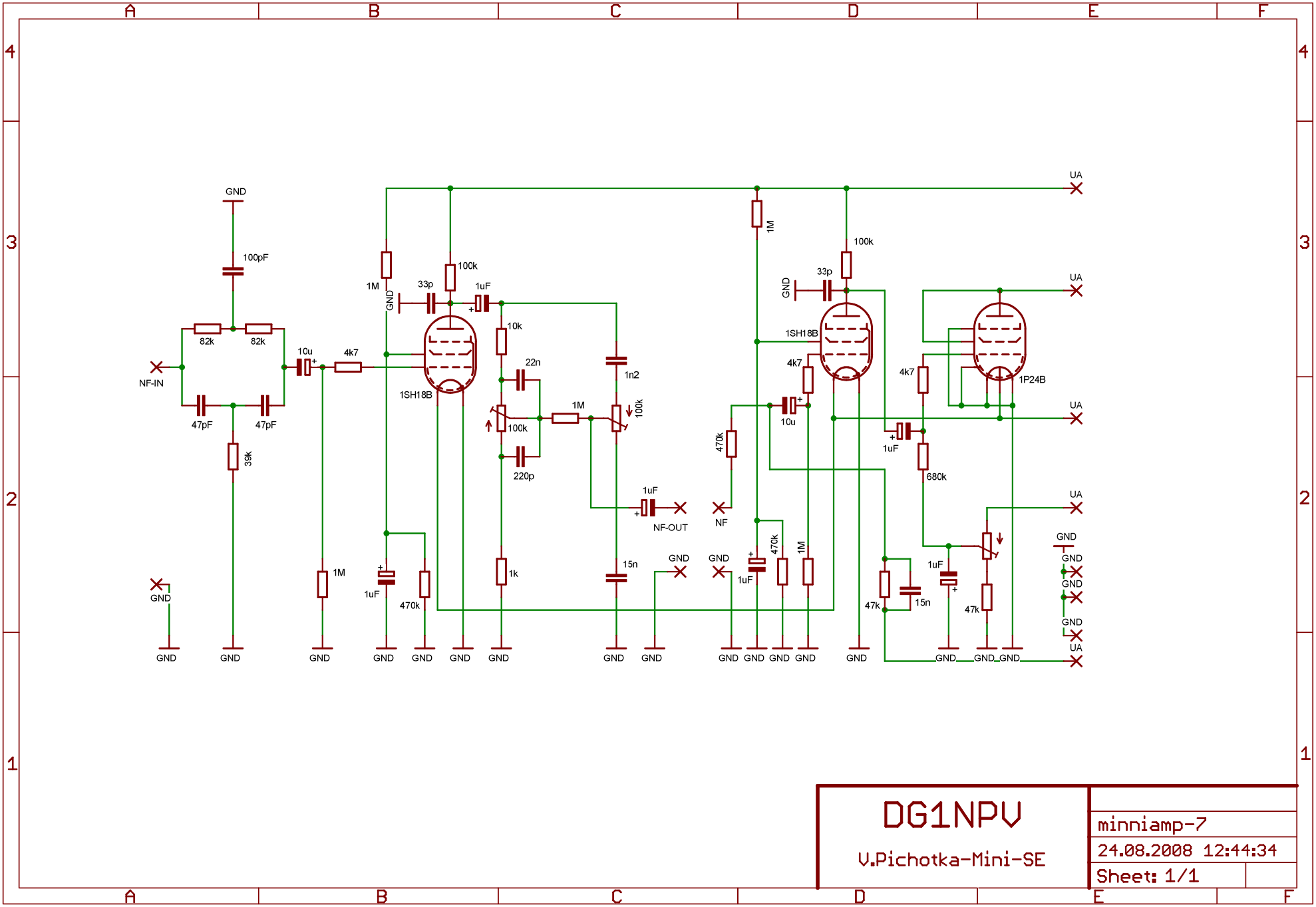
GND
100pF
82k
82k
NF-IN
47pF
47pF
39k
10u
4k7
1M
GND
1M
33p
100k
1uF
1SH18B
10k
22n
100k
220p
1M
100k
1n2
1uF
NF-OUT
1k
15n
1uF
470k
GND
GND
GND