NATIONAL RADIO INSTITUTE
MODEL 68 TUBE TESTER

OPERATING INSTRUCTIONS

(Follow in Order Listed)

LINE ADJUSTMENT

(1) Insert power cord into a 110 volt 60 cycle supply.
(2) Set "A-CIRCUIT" knob as shown in column "A-CIR."
(3) Set "B-FILAMENT" knob as shown in column "B-FIL."
(4) Set "C-LOAD" knob as shown in column "C-LOAD."
(5) Set levers as shown in column "U-UP" and "D-DOWN."
(6) Insert tube in socket.
(7) Turn "LINE" knob until meter pointer reads at "LINE TEST" mark.

SHORT TEST

(8) Move each lever referred to in light face type on chart (one at a time) two positions and back. For example, type 01-A move levers 2 and 3 to "D" position. A shorted tube is indicated by a bright red glow of the "SHORT TEST" neon lamp.

VALUE TEST

(9) Hold "TEST" knob in "VALUE" position and read tube condition on meter.
(10) Release "TEST" knob. Return all levers to center position.

SPECIAL TESTS

OPEN ELEMENT TEST

(1a) Follow operations (1) through (9).
(2a) With "Test" knob in "VALUE" position, move each lever in "U" position (only those shown on chart in light face type) to "D" position (one at a time) and return. Continuity between tube pin and the element being tested is indicated by a change in pointer deflection. A small change denotes a satisfactory plate or screen connection. A large change denotes a satisfactory grid connection. When there is only one lever in "U" position, no open element test need be made.
(3a) Release "TEST" knob.

FILAMENT AND TAP CONTINUITY TEST

(1b) Follow operations (1) through (7).
(2b) Set "B-FILAMENT" knob back to .75 position.
(3b) Move each lever referred to in **dark face** type on chart (one at a time) two positions and back. For example, type 01-A move lever 4 to "U" position. "Good" filament or other internal pin connection is indicated by a bright red glow of the "SHORT TEST" neon lamp.

CONTINUITY TEST (pilot lamps and other miniature base bulbs)

(1c) Follow operations (1) and (7) under "LINE ADJUSTMENT."
(2c) Set "B-FILAMENT" knob to voltage of lamp under test.
(3c) Place lamp in center of 7 prong socket.
(4c) A "good" lamp is indicated by normal lighting of its filament.

TUBE CHART NOTES

TEST 2 and TEST 3

When more than one test is given on the chart for the same tube type, proceed as noted below:
(1e) Follow operation (1) through (10)—(first test).
(2e) Reset all knobs and levers as noted on the chart for Test 2.
(3e) Hold "TEST" knob in "VALUE" position and read tube condition on meter.
(4e) Repeat operations (1e), (2e), and (3e) for Test 3.
(5e) Release "TEST" knob. Return all levers to center position and turn "LINE" knob to "OFF."
Special note on chart refers to the tube directly preceeding note.
Lever markings 1 through 9 designate RMA tube pin numbers 1 through 9 respectively.
Lever "0" designates the Top Cap Connection.
"Good tube reads 5," etc., indicates tubes reading 5 and higher are good.
"Tapped Fil. See Oper. Inst. (1b) to (3b)" is added after the more common tubes with tapped filaments. It is a reminder that filament tap continuity must be checked. For the most accurate check, the FILAMENT AND TAP CONTINUITY TEST should be made on all tubes.

INSTRUCTIONS FOR MAKING CHART LISTINGS

NEW TUBE TYPES

From time to time, supplementary tube data will be available to cover new tube types. Until this data is set up, the following may be used to obtain preliminary chart settings.

Use 3 or more new tubes and proceed as follows:

(1f) Refer to manufacturer's handbook under the particular tube type for filament voltage and pin connections.

(2f) Set "A-CIRCUIT" switch as follows:
"1" for tubes with cathode current below 4 Ma, generally diode types.
"2" for tubes with cathode current from 3 to 15 Ma, generally filament types excluding diodes.
"3" for tubes with cathode current above 8 Ma, generally indirectly heated (cathode) types excluding diodes.
"4" for target or eye tubes, gaseous rectifiers and gaseous control tubes.

(3f) Set "B-FILAMENT" switch to filament voltage.

(4f) Refer to base drawing in "Manufacturer's Handbook" on tubes for the type being set up. Levers "1234, etc." compare to RMA pin numbers.

(5f) Set all levers in normal or center position. This is one of the "FILAMENT" positions and all elements in this position are tied together.

(6f) Find the first filament connection pin on tube base and leave corresponding lever in center position. This connects one side of filament to the filament transformer.

(7f) Find the second filament connection pin on tube base and move corresponding lever to "D" position. This connects the opposite side of the filament to the filament transformer. If filament is tapped at center, move corresponding filament pins to connect the two sections of filament in parallel. If filament has a panel lamp section, move the levers corresponding to this section to "D" position.

(8f) Find the cathode connection pin on tube base and move corresponding lever to "D" position. This connects the cathode to one side of the filament transformer.

(9f) If the tube is of the multi-section type such as duodiodes, duotriodes, etc., find the elements not under test and move corresponding levers to "D" position.

(10f) Move all levers corresponding to the other active elements under test to "U" position.

(11f) Insert tube into proper socket.

(12f) Turn on "LINE" control and adjust so that meter reads at "LINE TEST" mark.

(13f) Hold "TEST" switch in "VALUE" position. Adjust "C-LOAD" control for each tube so that the majority of the new tubes read 70 on the meter scale.

(14f) List settings in the book for further reference.

GENERAL NOTES

Pointer indication above full scale indicates tube is extremely good or more than 130%. To make element continuity check on these tubes, turn load control "C" so that pointer falls within end scale markings and proceed with continuity tests.

The seven pin sub-miniature socket is used for 5, 6 and 7 prong tubes. Place the red dot on the tube to the extreme right to match the dot on the socket.

Cathode to heater leakage is indicated by a **faint** glow of the "SHORT TEST" neon lamp when making short test operation (8).

TUBE SUFFIX LETTER SYMBOLS

In general, tubes with suffixes as noted below can be checked by using the set up for the tube without that suffix.

The letter G indicates a glass tube with an octal base.

GT Indicates use of a T-9 bulb.

Y Indicates an "Intermediate loss" base.

The letters A, B, C, D, E, and F used in sequence indicate improved versions unilaterally interchangeable with the prototype or its subsequent versions.

W Indicates a military type and is assigned only on behalf of the armed forces.

ADDITIONAL TUBES

TUBE TYPE	KNOBS A Cir	B Fil	C Load	LEVER POSITION U Up	D Down
00A	2	5	30	23	**4**
01A	2	5	45	23	**4**
0A2	4	Off	40	**15**	**247**
	(Good tube reads 10)				
0A3/VR75	4	Off	30	5	**237**
	(Good tube reads 10)				
0B3/VR90	4	Off	30	5	**237**
	(Good tube reads 10)				
0C3/VR105	4	Off	30	5	**237**
	(Good tube reads 10)				
0D3/VR150	4	Off	30	5	**237**
	(Good tube reads 10)				
1C21	4	Off	45	5	27
2C51	2	6.3	23	34	267**89**
2C51 Test 2	2	6.3	23	67	**2**348**9**
2C52	2	12.6	26	45	6**7**
2C52 Test 2	2	12.6	26	12	3**7**
2D21	3	6.3	18	1**567**	2**4**
2E24	3	3.3	22	350	**27**
	(In Short Test, levers 1, 4 and 6 should show short when moved to "U" position)				
2E26	3	6.3	21	350	1**246**
2E30	3	3.3	12	**12**56	3**4**
2E31	1	1.2	25	124	**5**
2E32	1	1.2	25	124	**5**
2E35	1	1.2	27	124	**5**
2E36	1	1.2	27	124	**5**

TUBE TYPE	KNOBS A Cir	B Fil	C Load	LEVER POSITION U Up	D Down
2E41	1	1.2	56	125	**6**
2E41 Test 2	1	1.2	95	3	**6**
	(Good tube reads 10)				
2E42	1	1.2	56	125	**6**
2E42 Test 2	1	1.2	95	3	**6**
	(Good tube reads 10)				
3B4	3	1.2	47	137	**5**
6AL7	1	6.3	40	13456	2**8**
6AL7 Eye OP	**4**	**6.3**	**0**	3	**2**468
6AL7 Eye CL	4	6.3	0	3	2**8**
6AS5	1	6.3	19	**25**67	1**3**
6AN5	3	6.3	17	156	**247**
6N4	2	6.3	24	**157**	**246**
6BA7	3	6.3	18	12	3**5**679
6BA7 Test 2	1	6.3	36	1679	23**5**
7AK7	3	6.3	28	2346	7**8**
7C4/1203A	2	6.3	33	4	7**8**
12A	2	5	26	23	**4**
12AV6	3	12.6	19	17	2**4**
12AV6 Test 2	1	12.6	44	5	2**4**
12AV6 Test 3	1	12.6	44	6	2**4**
12AW6	2	12.6	22	1567	2**4**
	(No open element check on lever 5)				
12BA7	3	12.6	18	12	3**5**679
12BA7 Test 2	1	12.6	36	1679	23**5**
12L8G	3	12.6	20	345	2**7**
12L8G Test 2	3	12.6	22	158	2**7**

ADDITIONAL TUBES

TUBE TYPE	KNOBS A Cir	B Fil	C Load	LEVER POSITION U Up	D Down
12S8	1	12.6	27	60	**28**
12S8 Test 2	1	12.6	39	3	5**8**
12S8 Test 3	1	12.6	37	1	**28**
12S8 Test 4	1	12.6	34	4	**28**
19J6	2	12.6	24	16	3**7**
19J6 Test 2	2	12.6	24	25	3**7**
26D6	2	25	22	16	2**3**57
26D6 Test 2	1	25	40	567	12**3**
35C5	3	32	20	**25**67	1**3**
50C5	3	50	17	**25**67	1**3**
50Y7	3	50	20	3	4**67**
50Y7 Test 2	3	50	20	5	**67**8
210-T	3	7.5	56	23	**4**
230-S	2	2	35	23	**4**
233-S	3	2	39	234	**5**
234-S	2	2	40	230	**4**
262-B	3	7.5	42	20	3**4**
274-A	3	5	36	2	**4**
274-A Test 2	3	5	36	3	**4**
300-B	3	5	21	23	4
313-CB	4	Off	53	2	14
313-CD	4	Off	44	2	14
376-B	4	Off	37	5	27
393-A	4	2.5	20	40	**12**
507-AX	1	1.2	26	124	**5**
523AX	1	1.2	25	124	**5**
525AX	1	1.2	26	124	**5**
526AX	1	1.2	26	124	**5**
553AXA	1	1.2	25	124	**5**
605CX	2	6.3	22	1257	**4**6
606BX	2	6.3	23	1	**3**4
608CX	3	6.3	20	15	**4**6
619CX	2	6.3	25	14	**3**5
717-A	1	6.3	23	468	**357**
816	4	2.5	19	0	**1**
FM-1000	1	6.3	20	25	**1**37
FM-1000 Test 2	1	6.3	35	46	**1**37
1229	1	2	25	230	**4**
1266	4	Off	95	5	237
(Good tube reads 10. No open element test on levers 3 and 7. Tube normally shows short in short position.)					
1275	3	5	30	2	3**4**
1275 Test 2	3	5	30	3	2**4**
1635	2	6.3	26	34	56**7**8
1635 Test 2	2	6.3	26	56	34**7**8
1654	1	1.4	41	0	**1**
5516	3	3.3	25	350	**27**
5618	3	3.3	21	2346	**17**
5651	4	Off	95	**15**	**247**
(Good tube reads 30)					

TUBE TYPE	KNOBS A Cir	B Fil	C Load	LEVER POSITION U Up	D Down
5672	1	1.2	26	124	**5**
5676	2	1.2	28	13	**4**
5677	1	1.2	24	13	**4**
5678	1	1.2	23	124	**3**
5691	3	6.3	28	12	3**7**
5691 Test 2	3	6.3	28	45	6**7**
5692	2	6.3	26	12	3**7**
5692 Test 2	2	6.3	26	45	6**7**
5693	2	6.3	27	3468	5**7**
RK-61	1	1.4	26	13	**4**
5696	2	6.3	31	16	2**457**
5731	2	6.3	37	4	**7**8
WL-481	4	2.5	59	0	**4**

TUBE CHART

TUBE TYPE	KNOBS A Cir	B Fil	C Load	LEVER POSITION U Up	D Down
0A4	4	Off	40	7	25
0A4 Test 2.....	4	Off	44	5	27
OB2	4	Off	95	15	247
(Good tube reads 10)					
0Y4	4	Off	22	5	378
0Z4	4	Off	22	5	38
0Z4 Test 2.....	4	Off	22	3	58
1A3	1	1.4	75	26	37
1A4	1	2	28	230	4
1A5	2	1.4	50	345	7
1A6	2	2	50	34	6
1A6 Test 2.....	1	2	95	250	6
1A7	1	1.4	21	56	7
1A7 Test 2.....	1	1.4	95	340	7
1B3/8016	1	1.2	98	0	1345678
(Good Tube Reads 10)					
(For element test, use levers "7" & "0" only.)					
1B4	1	2	27	230	4
1B4P	2	2	35	230	4
1B5	1	2	31	25	6
1B5 Test 2.....	1	2	40	4	6
1B5 Test 3.....	1	2	40	3	6
1B7	1	1.4	26	56	7
1B7 Test 2.....	1	1.4	95	340	7
1B8	2	1.4	32	345	7
1B8 Test 2.....	2	1.4	60	60	7
1B8 Test 3.....	1	1.4	95	8	7
1C5	2	1.4	37	345	7
1C6	2	2	42	34	6
1C6 Test 2.....	1	2	68	250	6
1C7	2	2	41	56	7
1C7 Test 2.....	1	2	56	340	7
1D5	2	2	39	340	7
1D5GP	2	2	33	340	7
1D7	1	2	31	56	7
1D7 Test 2.....	1	2	95	340	7
1D8	2	1.4	48	60	7
1D8 Test 2.....	2	1.4	37	345	7
1D8 Test 3.....	1	1.4	95	8	7
1E4	2	1.4	45	35	7
1E5	1	2	35	340	7
1E7	2	2	30	348	7
1E7 Test 2.....	2	2	30	568	7
1F4	3	2	47	234	5
1F5	2	2	36	345	7
1F6	1	2	37	230	6
1F6 Test 2.....	1	2	95	4	6
1F6 Test 3.....	1	2	95	5	6
1F7	1	2	35	360	7
1F7 Test 2.....	1	2	95	5	7

TUBE TYPE	KNOBS A Cir	B Fil	C Load	LEVER POSITION U Up	D Down
1F7 Test 3.....	1	2	95	4	7
1F7-GV	1	2	35	360	7
1F7-GV Test 2..	1	2	95	4	7
1F7-GV Test 3..	1	2	95	4	7
1G4	1	1.4	30	35	7
1G5	2	2	39	345	7
1G6	1	1.4	35	34	7
1G6 Test 2.....	1	1.4	35	56	7
1H4	2	2	41	35	7
1H5	1	1.4	33	30	7
1H5 Test 2.....	1	1.4	40	5	7
1H6	1	2	30	36	7
1H6 Test 2.....	1	2	40	5	7
1H6 Test 3.....	1	2	40	4	7
1J5	2	2	38	345	7
1J6	2	2	39	34	7
1J6 Test 2.....	2	2	39	56	7
1L4	2	1.4	37	236	15
1LA4	2	1.4	40	236	8
1LA6	1	1.4	30	34	8
1LA6 Test 2....	1	1.4	95	256	8
(Good Tube Reads 40)					
1LB4	2	1.4	40	236	8
1LB6	1	1.4	32	234567	8
1LC5	1	1.4	32	2346	58
1LC6	1	1.4	32	34	8
1LC6 Test 2....	1	1.4	80	256	8
1LD5	1	1.4	32	236	8
1LD5 Test 2....	1	1.4	95	4	8
(Good Tube Reads 20)					
1LE3	2	1.4	37	26	8
1LH4	1	1.4	40	26	8
1LH4 Test 2....	1	1.4	95	4	8
(Good Tube Reads 20)					
1LN5	2	1.4	40	2346	58
1N5	1	1.4	27	340	7
1N6	2	1.4	38	345	7
1N6 Test 2.....	1	1.4	95	6	7
(Good Tube Reads 20)					
1P5	1	1.4	31	340	7
1Q5	2	1.4	33	345	7
1R4	1	1.5	57	4	78
1R5	1	1.4	21	4	15
1R5 Test 2.....	1	1.4	95	236	15
1S4	2	1.4	30	2346	15
1S5	1	1.4	41	456	7
1S5 Test 2.....	1	1.4	55	3	7
1SA6	2	1.4	30	3468	7
1SB6	1	1.4	36	348	7
1SB6 Test 2.....	1	1.4	90	5	7

TUBE CHART

TUBE TYPE	KNOBS A Cir	B Fil	C Load	LEVER POSITION U Up	D Down
1T4	2	1.4	35	236	**7**
1T5	2	1.4	40	345	**7**
1U4	2	1.4	30	236	**15**
1U5	2	1.4	40	236	**1**
1U5 Test 2	1	1.4	66	4	**1**
1V	3	6.3	24	2	3**4**
1Z2	1	1.4	90	0	**257**
(Good Tube Reads 30)					
2A3	3	2.5	28	23	**4**
2A4	3	2.5	25	5	**7**
2A4 Test 2	3	2.5	25	3	5**7**
(No Short Test)					
2A5	3	2.5	36	234	5**6**
2A6	3	2.5	26	20	5**6**
2A6 Test 2	1	2.5	40	4	5**6**
2A6 Test 3	1	2.5	40	3	5**6**
2A7	2	2.5	32	5	6**7**
2A7 Test 2	2	2.5	64	2340	6**7**
2B6	2	2.5	95	2	**67**
2B6 Test 2	3	2.5	50	34	5**7**
2B7	3	2.5	47	230	6**7**
2B7 Test 2	1	2.5	40	5	6**7**
2B7 Test 3	1	2.5	40	4	6**7**
2E5	2	2.5	44	23	5**6**
2E5 Eye CL	4	2.5	0	24	35**6**
2E5 Eye OP	4	2.5	0	4	235**6**
2G5	2	2.5	44	23	5**6**
2G5 Eye CL	4	2.5	0	24	35**6**
2G5 Eye OP	4	2.5	0	4	235**6**
2G21	1	1.2	26	1256	3**7**
2G22	1	1.2	26	1256	3**7**
2S/4S	1	2.5	45	3	4**5**
2S/4S Test 2	1	2.5	45	2	4**5**
2V3	1	2.5	96	0	**7**
(Good Tube Reads 20)					
2W3	2	2.5	36	4	**8**
2X2/879	4	2.5	52	0	**4**
2X3	3	2.5	43	4	**8**
2Y2	1	2.5	95	0	**4**
(Good Tube Reads 40)					
2Z2	3	2.5	56	2	**4**
3A4	2	1.4	26	23**46**	**17**
3A5	2	1.4	30	23	**4**
3A5 Test 2	2	1.4	30	56	**4**
3A8	1	1.4	36	340	**27**
3A8 Test 2	1	1.4	36	56	**27**
3A8 Test 3	1	1.4	45	8	**27**
3B5	2	1.4	35	345	**27**
(Tapped Filament—See Instructions 1b to 3b)					
3B7	3	1.5	30	23	**18**
3B7 Test 2	3	1.5	30	67	**18**
3C5	2	1.4	34	345	**27**
3C6	2	1.4	40	34	**18**
3C6 Test 2	2	1.4	40	56	**18**
3D6	2	1.5	25	236	**18**
3E6	2	1.5	26	2346	**18**
(Tapped Filament—See Instructions 1b to 3b)					
3LE4	2	1.4	34	236	**18**
3LF4	2	1.5	27	236	**18**
(Tapped Filament—See Instructions 1b to 3b)					
3Q4	2	1.4	33	23**46**	**17**
(Tapped Filament—See Instructions 1b to 3b)					
3Q5	3	1.4	33	345	**27**
(Tapped Filament—See Instructions 1b to 3b)					
3S4	2	1.4	35	23**46**	**17**
(Tapped Filament—See Instructions 1b to 3b)					
3V4	2	1.4	33	236	**17**
(Tapped Filament—See Instructions 1b to 3b)					
4A6	2	2	35	34	**8**
4A6 Test 2	3	2	46	56	**8**
5AZ4	3	5	57	6	**8**
5AZ4 Test 2	3	5	57	4	**8**
5R4 (GY)	3	5	34	4	**8**
5R4 (GY) Test 2	3	5	34	6	**8**
5T4	3	5	35	6	**8**
5T4 Test 2	3	5	35	4	**8**
5U4	3	5	35	6	**8**
5U4 Test 2	3	5	35	4	**8**
5V4	3	5	25	6	**8**
5V4 Test 2	3	5	25	4	**8**
5W4	3	5	48	6	**8**
5W4 Test 2	3	5	48	4	**8**
5X3	3	5	43	2	**4**
5X3 Test 2	3	5	43	3	**4**
5X4	3	5	33	5	**8**
5X4 Test 2	3	5	33	3	**8**
5Y3	3	5	57	6	**8**
5Y3 Test 2	3	5	57	4	**8**
5Y4	3	5	57	5	**7**
5Y4 Test 2	3	5	57	3	**7**
5Z3	3	5	35	3	**4**
5Z3 Test 2	3	5	35	2	**4**
5Z4	3	5	27	6	**2**
5Z4 Test 2	3	5	27	4	**2**
6A3	3	6.3	28	23	**4**
6A4/LA	3	6.3	36	234	**5**
6A5	2	3.3	26	35	**27**
(Tapped Filament—See Instructions 1b to 3b)					
6A6	3	6.3	36	23	**47**
6A6 Test 2	3	6.3	36	56	**47**

TUBE CHART

TUBE TYPE	KNOBS A Cir	B Fil	C Load	LEVER POSITION U Up	D Down
6A7	2	6.3	30	45	67
6A7 Test 2	2	6.3	38	230	67
6A8	2	6.3	31	56	78
6A8 Test 2	2	6.3	40	340	78
6AB5	2	6.3	95	23	56
6AB5 Eye CL	4	6.3	0	24	356
6AB5 Eye OP	4	6.3	0	4	2356
6AB6	3	6.3	62	45	378
6AB6 Test 2	3	6.3	44	35	478
6AB7	3	6.3	23	468	357
6AC5	3	6.3	34	35	78
6AC6	2	6.3	30	35	78
6AC6 Test 2	3	6.3	35	45	78
6AC7	3	6.3	21	468	357
6AD6	2	6.3	95	345	78
(Good Tube Reads 15)					
6AD6 Eye CL	4	6.3	0	346	78
6AD6 Eye OP	4	6.3	0	5	3478
6AD7	3	6.3	33	345	78
6AD7 Test 2	2	6.3	51	16	78
6AE5	3	6.3	29	35	78
6AE6	2	6.3	33	35	78
6AE6 Test 2	2	6.3	33	45	78
6AE7	2	6.3	26	34	57
6AE7 Test 2	2	6.3	27	36	78
6AF5	2	6.3	24	35	78
6AF6	2	6.3	95	345	78
(Good Tube Reads 15)					
6AF6 Eye CL	4	6.3	0	345	78
6AF6 Eye OP	4	6.3	0	5	3478
6AG5	3	6.3	20	156	237
6AG7	3	6.3	24	468	57
6AH7	3	6.3	30	13	27
6AH7 Test 2	3	6.3	30	56	47
6AJ5	2	6.3	23	156	237
6AK5	2	6.3	22	156	237
6AK6	3	6.3	30	1256	37
6AL5	1	6.3	23	7	14
6AL5 Test 2	1	6.3	23	2	45
6AL6	3	6.3	24	450	78
6AQ5	3	6.3	22	1567	24
6AQ6	1	6.3	20	17	23
6AQ6 Test 2	1	6.3	40	5	23
6AQ6 Test 3	1	6.3	40	6	23
6AQ7	1	6.3	22	45	12368
6AQ7 Test 2	1	6.3	34	3	128
6AQ7 Test 3	1	6.3	34	1	28
6AR5	3	6.3	12	156	24
6AR6	3	6.3	20	357	18
6AS7	3	6.3	16	12	38

TUBE TYPE	KNOBS A Cir	B Fil	C Load	LEVER POSITION U Up	D Down
6AS7 Test 2	3	6.3	16	45	68
6AT6	1	6.3	20	17	23
6AT6 Test 2	1	6.3	35	5	23
6AT6 Test 3	1	6.3	35	6	23
6AU6	2	6.3	22	1256	47
6AV6	3	6.3	19	17	24
6AV6 Test 2	1	6.3	44	5	24
6AV6 Test 3	1	6.3	44	6	24
6B4	3	6.3	28	35	7
6B5	3	6.3	45	24	356
6B5 Test 2	3	6.3	63	34	256
6B6	3	6.3	32	30	78
6B6 Test 2	1	6.3	40	4	78
6B6 Test 3	1	6.3	40	5	78
6B7	3	6.3	50	230	67
6B7 Test 2	1	6.3	40	4	67
6B7 Test 3	1	6.3	40	5	67
6B8	3	6.3	45	360	78
6B8 Test 2	1	6.3	40	4	78
6B8 Test 3	1	6.3	40	5	78
6BA6	2	6.3	23	1256	47
6BD6	2	6.3	12	1256	47
6BE6	2	6.3	22	1	24
6BE6 Test 2	2	6.3	22	567	24
6BF6	3	6.3	28	17	2456
6BF6 Test 2	1	6.3	38	5	12467
6BF6 Test 3	1	6.3	38	6	12457
6BG6	3	6.3	19	580	37
6BJ6	2	6.3	22	1567	24
6C4	2	6.3	25	156	47
6C5	2	6.3	30	35	78
6C6	1	6.3	21	230	456
6C7	1	6.3	21	20	67
6C7 Test 2	1	6.3	40	4	67
6C7 Test 3	1	6.3	40	5	67
6C8	2	6.3	27	30	47
6C8 Test 2	2	6.3	27	56	78
6D4	3	6.3	20	17	45
6D5	3	6.3	32	35	78
6D6	3	6.3	21	2340	56
6D7	2	6.3	28	230	467
6D8	2	6.3	34	56	78
6D8 Test 2	2	6.3	42	340	78
6E5	2	6.3	36	23	56
6E5 Eye CL	4	6.3	0	24	356
6E5 Eye OP	4	6.3	0	4	2356
6E6	3	6.3	31	23	47
6E6 Test 2	3	6.3	31	56	47
6E7	2	6.3	28	230	467
6F4	2	6.3	22	1456	78
(Use Adapter BR)					

ADDITIONAL TUBES

TUBE TYPE	KNOBS A Cir	B Fil	C Load	LEVER POSITION U Up	D Down
6F5	1	6.3	20	40	78
6F6	3	6.3	32	345	78
6F7	3	6.3	43	230	67
6F7 Test 2	3	6.3	82	45	67
6F8	2	6.3	24	30	47
6F8 Test 2	2	6.3	24	56	78
6G5	2	6.3	36	23	56
6G5 Eye CL	4	6.3	0	24	356
6G5 Eye OP	4	6.3	0	4	2356
6G6	3	6.3	36	345	78
6G7	3	6.3	36	20	357
6G7 Test 2	1	6.3	24	4	37
6G7 Test 3	1	6.3	24	6	37
6H4	1	6.3	26	4	78
6H5	2	6.3	36	23	56
6H5 Eye CL	4	6.3	0	24	356
6H5 Eye OP	4	6.3	0	4	2356
6H6	1	6.3	25	3	47
6H6 Test 2	1	6.3	25	5	78
6H7S	3	6.3	33	234	67
6H7S Test 2	2	6.3	52	50	67
6J4	2	6.3	20	1567	24
6J5	2	6.3	24	35	78
6J6	1	6.3	18	16	47
6J6 Test 2	1	6.3	18	25	47
6J7	2	6.3	29	340	1578
6J8	2	6.3	25	340	78
6J8 Test 2	2	6.3	25	56	78
6K5	1	6.3	20	30	78
6K6	3	6.3	34	345	78
6K7	2	6.3	32	340	578
6K8	1	6.3	20	56	78
6K8 Test 2	1	6.3	22	340	578
6L5	2	6.3	26	35	78
6L6	3	6.3	27	345	78
6L7	2	6.3	56	4	78
6L7 Test 2	2	6.3	26	350	78
6N5	1	6.3	37	23	56
6N5 Eye CL	4	6.3	0	24	356
6N5 Eye OP	4	6.3	0	4	2356
6N6	3	6.3	61	45	378
6N6 Test 2	3	6.3	41	35	478
6N7	3	6.3	29	34	78
6N7 Test 2	3	6.3	29	56	78
6P5	2	6.3	30	35	78
6P7	2	6.3	32	450	28
6P7 Test 2	3	6.3	70	67	28
6Q6	1	6.3	20	30	78
6Q6 Test 2	1	6.3	90	5	78
6Q7	1	6.3	21	30	78
6Q7 Test 2	1	6.3	47	4	78

TUBE TYPE	KNOBS A Cir	B Fil	C Load	LEVER POSITIO U Up	D Dow
6Q7 Test 3	1	6.3	47	5	78
6R6	3	6.3	41	350	78
6R7	3	6.3	37	30	78
6R7 Test 2	1	6.3	33	4	78
6R7 Test 3	1	6.3	33	5	78
6S6	3	6.3	24	140	78
6S7	2	6.3	28	340	578
6S8	1	6.3	28	60	27
6S8 Test 2	1	6.3	40	1	27
6S8 Test 3	1	6.3	40	4	27
6S8 Test 4	1	6.3	40	3	57
6SA7	2	6.3	24	45	678
6SA7 Test 2	2	6.3	28	348	167
6SB7Y	2	6.3	22	45	167
6SB7Y Test 2	1	6.3	34	348	567
6SC7	3	6.3	33	23	67
6SC7 Test 2	3	6.3	38	45	67
6SD7	3	6.3	23	468	357
6SE7	2	6.3	23	468	357
6SF5	1	6.3	20	35	27
6SF7	3	6.3	30	246	37
6SF7 Test 2	1	6.3	40	5	37
6SG7	3	6.3	19	468	357
6SH7	2	6.3	20	468	357
6SJ7	2	6.3	27	468	357
6SK7	3	6.3	34	468	357
6SL7	3	6.3	28	12	37
6SL7 Test 2	3	6.3	28	45	67
6SN7	2	6.3	26	12	37
6SN7 Test 2	2	6.3	26	45	67
6SQ7	1	6.3	20	26	37
6SQ7 Test 2	1	6.3	40	4	37
6SQ7 Test 3	1	6.3	40	5	37
6SR7	2	6.3	30	26	37
6SR7 Test 2	1	6.3	50	4	37
6SR7 Test 3	1	6.3	50	5	37
6SS7	3	6.3	30	468	357
6ST7	2	6.3	28	26	37
6ST7 Test 2	1	6.3	95	4	37
6ST7 Test 3	1	6.3	95	5	37
6SU7	2	6.3	25	45	12368
6SU7 Test 2	2	6.3	25	12	34568
6SV7	2	6.3	23	246	38
6SV7 Test 2	2	6.3	28	5	38
6SZ7	1	6.3	21	26	38
6SZ7 Test 2	1	6.3	50	4	38
6SZ7 Test 3	1	6.3	50	5	38
6T5	1	6.3	24	23	56
6T5 Eye CL	4	6.3	0	24	356
6T5 Eye OP	4	6.3	0	4	2356
6T6M	2	6.3	22	340	78

TUBE CHART

TUBE TYPE	KNOBS A Cir	B Fil	C Load	LEVER POSITION U Up	D Down
6T7	1	6.3	20	30	78
6T7 Test 2	1	6.3	40	4	78
6T7 Test 3	1	6.3	40	5	78
6T8	3	6.3	26	89	357
6T8 Test 2	1	6.3	26	2	357
6T8 Test 3	1	6.3	26	1	357
6T8 Test 4	1	6.3	26	6	357
6U5	2	6.3	37	23	56
6U5 Eye CL	4	6.3	0	24	356
6U5 Eye OP	4	6.3	0	4	2356
6U6	3	6.3	24	345	78
6U7	2	6.3	30	340	578
6V4	3	6.3	26	2	45
6V4 Test 2	3	6.3	26	3	45
6V6	3	6.3	29	345	178
6V7	3	6.3	46	0	78
6V7 Test 2	1	6.3	50	4	78
6V7 Test 3	1	6.3	50	5	78
6W5	3	6.3	25	3	78
6W5 Test 2	3	6.3	25	5	78
6W6	3	6.3	21	345	78
6W7	1	6.3	20	340	578
6X4	3	6.3	25	1	47
6X4 Test 2	3	6.3	25	6	47
6X5	3	6.3	28	3	78
6X5 Test 2	3	6.3	28	5	78
6X6	2	6.3	41	5	78
6X6 Eye CL	4	6.3	0	34	578
6X6 Eye OP	4	6.3	0	4	3578
6Y5	3	6.3	28	3	46
6Y5 Test 2	3	6.3	28	5	46
6Y6	3	6.3	19	345	78
6Y7	3	6.3	33	34	78
6Y7 Test 2	3	6.3	33	56	78
6Z3	3	6.3	24	2	34
6Z4	3	6.3	26	2	45
6Z4 Test 2	3	6.3	26	3	45
6Z5	3	6.3	25	3	14
6Z5 Test 2	3	6.3	25	5	14
6Z7	3	6.3	32	34	78
6Z7 Test 2	3	6.3	32	56	78
6ZY5	3	6.3	36	3	78
6ZY5 Test 2	3	6.3	36	5	78
7A4	2	6.3	24	26	78
7A5	3	6.3	23	236	78
7A6	1	6.3	28	3	28
7A6 Test 2	1	6.3	28	6	78
7A7	3	6.3	28	236	478
7A8	2	6.3	35	34	78
7A8 Test 2	2	6.3	44	256	78

TUBE TYPE	KNOBS A Cir	B Fil	C Load	LEVER POSITION U Up	D Down
7AB7	3	6.3	26	135	4678
7AD7	3	6.3	17	2346	578
7AF7	2	6.3	25	34	278
7AF7 Test 2	2	6.3	25	56	278
7AG7	2	6.3	22	236	4578
7AH7	2	6.3	21	2346	78
7AJ7	2	6.3	23	236	478
7B4	1	6.3	22	26	78
7B5	3	6.3	29	236	78
7B6	2	6.3	25	23	478
7B6 Test 2	1	6.3	58	5	478
7B6 Test 3	1	6.3	58	6	478
7B6LM	3	6.3	31	23	478
7B6LM Test 2	1	6.3	58	5	478
7B6LM Test 3	1	6.3	58	6	478
7B7	2	6.3	28	236	478
7B8	2	6.3	28	34	78
7B8 Test 2	2	6.3	34	256	78
7C4/1203-A	2	6.3	33	4	78
7C5	3	6.3	29	236	78
7C5LT	3	6.3	29	236	78
7C6	3	6.3	33	23	478
7C6 Test 2	1	6.3	40	5	478
7C6 Test 3	1	6.3	40	6	478
7C7	1	6.3	22	236	478
7E5	2	6.3	34	1357	468
7E6	2	6.3	27	23	478
7E6 Test 2	1	6.3	45	5	478
7E6 Test 3	1	6.3	45	6	478
7E7	3	6.3	36	256	78
7E7 Test 2	1	6.3	40	3	78
7E7 Test 3	1	6.3	46	4	78
7F7	1	6.3	20	34	28
7F7 Test 2	1	6.3	20	56	78
7F8	2	6.3	22	13	47
7F8 Test 2	2	6.3	22	68	57
7G7	2	6.3	24	236	478
7G8	2	6.3	24	234	5678
7G8 Test 2	2	6.3	24	357	2468
7H7	2	6.3	24	236	478
7J7	2	6.3	30	345	78
7J7 Test 2	2	6.3	30	256	78
7K7	1	6.3	20	34	28
7K7 Test 2	1	6.3	39	5	78
7K7 Test 3	1	6.3	39	6	78
7L7	2	6.3	26	236	478
7N7	2	6.3	26	34	28
7N7 Test 2	2	6.3	26	56	78
7Q7	2	6.3	25	34	78
7Q7 Test 2	2	6.3	41	256	78

TUBE CHART

TUBE TYPE	KNOBS A Cir	B Fil	C Load	LEVER POSITION U Up	D Down
7R7	2	6.3	22	256	78
7R7 Test 2	1	6.3	50	3	78
7R7 Test 3	1	6.3	50	4	78
7S7	2	6.3	33	34	78
7S7 Test 2	2	6.3	23	256	78
7V7	3	6.3	18	236	478
7W7	2	6.3	24	236	4578
7X7	1	6.3	21	23	478
7X7 Test 2	1	6.3	20	5	478
7X7 Test 3	1	6.3	21	6	478
7Y4	3	6.3	33	3	78
7Y4 Test 2	3	6.3	33	6	78
7Z4	3	6.3	49	3	78
7Z4 Test 2	3	6.3	41	6	78
10	3	7.5	56	23	4
12A5	3	6.3	32	234	56
12A6	3	12.6	32	345	78
12A7	2	12.6	29	230	67
12A7 Test 2	1	12.6	20	5	47
12A8	2	12.6	36	56	78
12A8 Test 2	2	12.6	28	340	78
12AH7	3	12.6	30	13	27
12AH7 Test 2	3	12.6	30	56	47
12AL5	1	12.6	25	34	5678
12AL5 Test 2	1	12.6	25	56	23478
12AT6	3	12.6	26	17	23
12AT6 Test 2	1	12.6	35	5	23
12AT6 Test 3	1	12.6	35	6	23
12AT7	2	6.3	24	12	39
12AT7 Test 2	2	6.3	24	67	89
12AU6	2	12.6	22	1256	47
12AU7	2	6.3	25	12	345
12AU7 Test 2	2	6.3	25	67	458
12AX7	1	6.3	20	12	345
12AX7 Test 2	1	6.3	20	67	458
12B6	3	12.6	31	30	78
12B6 Test 2	1	12.6	58	4	78
12B6 Test 3	1	12.6	58	5	78
12B7/14A7	2	12.6	30	2346	78
12B8	2	12.6	26	340	17
12B8 Test 2	3	12.6	26	58	67
12BA6	2	12.6	22	1256	47
12BD6	2	12.6	27	1256	47
12BE6	2	12.6	24	1	24
12BE6 Test 2	2	12.6	24	567	24
12BF6	2	12.6	34	17	24
12BF6 Test 2	1	12.6	38	5	24
12BF6 Test 3	1	12.6	38	5	24
12C8	3	12.6	41	360	78
12C8 Test 2	1	12.6	38	4	78

TUBE TYPE	KNOBS A Cir	B Fil	C Load	LEVER POSITION U Up	D Down
12C8 Test 3	1	12.6	38	5	78
12E5	3	12.6	30	35	78
12F5	1	12.6	22	40	78
12H6	1	12.6	25	3	47
12H6 Test 2	1	12.6	25	5	78
12J5	2	12.6	24	35	78
12J7	1	12.6	20	340	578
12K7	3	12.6	34	340	578
12K8	3	12.6	52	340	78
12K8 Test 2	1	12.6	22	56	78
12Q7	1	12.6	20	30	78
12Q7 Test 2	1	12.6	40	4	78
12Q7 Test 3	1	12.6	40	5	78
12SA7	2	12.6	25	45	67
12SA7 Test 2	2	12.6	35	38	67
12SC7	1	12.6	20	23	67
12SC7 Test 2	1	12.6	20	45	67
12SF5	1	12.6	20	35	27
12SF7	3	12.6	30	246	37
12SF7 Test 2	1	12.6	40	5	37
12SG7	3	12.6	19	468	357
12SH7	3	12.6	19	468	357
12SJ7	1	12.6	20	468	357
12SK7	3	12.6	28	3468	57
12SL7	3	12.6	28	12	37
12SL7 Test 2	3	12.6	28	45	67
12SN7	2	12.6	29	12	37
12SN7 Test 2	2	12.6	29	45	67
12SQ7	1	12.6	22	26	37
12SQ7 Test 2	1	12.6	50	4	37
12SQ7 Test 3	1	12.6	50	5	37
12SR7	3	12.6	37	26	37
12SR7 Test 2	1	12.6	33	4	37
12SR7 Test 3	1	12.6	33	5	37
12SY7	2	12.6	32	138	67
12SY7 Test 2	2	12.6	26	45	67
12Z3	3	12.6	25	2	34
12Z5	3	6.3	25	2	34
12Z5 Test 2	3	6.3	25	6	45
12Z5/6Z5	3	6.3	25	3	14
12Z5/6Z5 Test 2	3	6.3	25	5	14
14	2	12.6	30	230	45
14A4	2	12.6	26	26	78
14A5	3	12.6	33	236	78
14A7/12B7	2	12.6	30	2346	78
14AF7	3	12.6	25	34	25678
14AF7 Test 2	3	12.6	25	56	23478
14B6	1	12.6	20	23	478
14B6 Test 2	1	12.6	40	5	478
14B6 Test 3	1	12.6	40	6	478

TUBE CHART

TUBE TYPE	KNOBS A Cir	B Fil	C Load	LEVER POSITION U Up	D Down
14B8	2	12.6	34	34	78
14B8 Test 2.....	2	12.6	30	256	78
14C5	3	12.6	25	236	78
14C7	2	12.6	28	236	478
14E6	3	12.6	31	23	478
14E6 Test 2.....	1	12.6	65	5	478
14E6 Test 3.....	1	12.6	65	6	478
14E7	2	12.6	28	256	78
14E7 Test 2.....	1	12.6	58	3	78
14E7 Test 3.....	1	12.6	58	4	78
14F7	1	12.6	20	34	28
14F7 Test 2.....	1	12.6	20	56	78
14F8	3	12.6	22	13	47
14F8 Test 2.....	3	12.6	22	68	57
14H7	2	12.6	22	236	478
14J7	2	12.6	32	345	678
14J7 Test 2.....	3	12.6	33	256	78
14N7	2	12.6	26	34	28
14N7 Test 2....	2	12.6	26	56	78
14Q7	2	12.6	25	34	78
14Q7 Test 2....	2	12.6	30	256	78
14R7	1	12.6	18	256	78
14R7 Test 2.....	1	12.6	50	3	78
14R7 Test 3.....	1	12.6	50	4	78
14S7	2	12.6	28	34	78
14S7 Test 2.....	2	12.6	24	256	78
14W7	2	12.6	22	236	4578
14X7	1	12.6	20	23	478
14X7 Test 2.....	1	12.6	20	5	478
14X7 Test 3.....	2	12.6	24	6	478
(Good Tube Reads 30)					
14Y4	3	12.6	28	3	78
14Y4 Test 2.....	3	12.6	28	6	78
14Z3	3	12.6	25	2	34
15	2	2	36	230	45
17	3	12.6	40	23	45
18	3	12.6	31	234	56
19	3	2	37	23	6
19 Test 2.....	3	2	39	45	6
19T8	3	25	22	89	123567
19T8 Test 2.....	1	25	17	2	1356789
19T8 Test 3.....	1	25	17	6	1235789
19T8 Test 4.....	1	25	17	1	2356789
20	2	6.3	48	23	4
20J8	1	12.6	22	56	78
20J8 Test 2.....	1	12.6	20	340	78
22	2	3.3	56	230	4
24A	2	2.5	32	230	45
25A6	3	25	27	345	78
25A7	3	25	27	345	78
25A7 Test 2.....	3	25	23	6	17

TUBE TYPE	KNOBS A Cir	B Fil	C Load	LEVER POSITION U Up	D Down
25AC5	3	25	31	35	78
25B5	3	25	37	24	56
25B5 Test 2.....	3	25	46	34	256
25B6	3	25	23	345	78
25B8	2	25	25	340	17
25B8 Test 2.....	2	25	25	58	67
25C6	3	25	25	345	78
25D8	2	25	26	56	17
25D8 Test 2.....	2	25	26	340	17
25D8 Test 3.....	1	25	22	8	17
25L6	3	25	22	345	78
25N6	2	25	30	345	78
25S	1	2	31	25	6
25S Test 2.....	1	2	40	4	6
25S Test 3.....	1	2	40	3	6
25X6	3	25	27	3	47
25X6 Test 2.....	3	25	27	5	78
25Y4	3	25	25	5	78
25Y5	3	25	30	2	36
25Y5 Test 2.....	3	25	30	5	46
25Z5	3	25	25	2	36
25Z5 Test 2.....	3	25	25	5	46
25Z6	3	25	24	3	47
25Z6 Test 2.....	3	25	24	5	78
26	2	1.5	36	23	4
26A6	2	25	22	1256	47
26A7	2	25	20	345	27
26A7 Test 2....	2	25	20	158	27
26C6	3	25	30	17	2456
26C6 Test 2.....	1	25	36	5	12467
26C6 Test 3.....	1	25	36	6	12457
27	2	2.5	32	23	45
28D7	2	25	22	234	68
28D7 Test 2.....	2	25	22	357	68
28Z5	3	12.6	38	3	187
28Z5 Test 2.....	3	12.6	38	6	47
(Tapped Filament—See Instructions 1b to 3b)					
29	2	2.5	36	23	456
30	2	2	35	23	4
31	2	2	40	23	4
32	2	2	42	230	4
32L7	3	32	21	345	78
32L7 Test 2.....	3	32	18	6	17
33	3	2	39	234	5
34	2	2	40	230	4
35	2	2.5	30	230	45
35A5	3	32	22	236	78
35B5	3	32	20	1567	24
(Shows Short 1 and 7)					
35L6	3	32	20	345	78

TUBE CHART

TUBE TYPE	KNOBS A Cir	B Fil	C Load	LEVER POSITION U Up	D Down
35W4	3	32	20	5	467
(Tapped Filament—See Instructions 1b to 3b)					
35Y4	3	32	23	2	147
(Tapped Filament—See Instructions 1b to 3b)					
35Z3	3	32	22	2	78
35Z4	3	32	20	5	78
35Z5	3	32	21	5	238
(Tapped Filament—See Instructions 1b to 3b)					
35Z6	3	32	20	3	47
35Z6 Test 2	3	32	20	5	78
36	2	6.3	32	230	45
37	3	6.3	37	23	45
38	3	6.3	36	230	45
39/44	2	6.3	30	230	45
40	1	5	28	23	4
40Z5	3	32	20	5	238
(Tapped Filament—See Instructions 1b to 3b)					
41	3	6.3	32	234	56
42	3	6.3	29	234	56
43	3	25	31	234	56
44	2	6.3	30	230	45
45	3	2.5	32	23	4
45Z3	3	50	24	26	47
45Z5	3	32	20	5	238
(Tapped Filament—See Instructions 1b to 3b)					
46	3	2.5	35	234	5
47	3	2.5	41	234	5
48	3	32	25	234	56
49	2	2	38	234	5
50	3	7.5	42	23	4
50A5	3	50	20	236	78
50B5	3	50	20	1567	24
50C6	3	50	22	345	78
50L6	3	50	21	345	78
50X6	3	50	19	3	28
50X6 Test 2	3	50	19	6	78
50Y6	3	50	23	3	47
50Y6 Test 2	3	50	23	5	78
50Z6	3	50	21	5	78
50Z6 Test 2	3	50	21	3	47
50Z7	3	50	25	3	467
50Z7 Test 2	3	50	25	5	678
(Tapped Filament—See Instructions 1b to 3b)					
51	3	2.5	35	230	45
52	3	6.3	30	234	5
53	3	2.5	32	23	47
53 Test 2	3	2.5	32	56	47
55	2	2.5	32	20	56
55 Test 2	1	2.5	40	3	56
55 Test 3	1	2.5	40	4	56
56	2	2.5	30	23	45

TUBE TYPE	KNOBS A Cir	B Fil	C Load	LEVER POSITION U Up	D Down
57	2	2.5	30	230	456
57A (AS)	3	6.3	34	230	456
58	3	2.5	35	230	456
59	3	2.5	29	2345	67
64	1	6.3	22	230	45
65	2	6.3	28	230	45
67	3	6.3	37	23	45
68	3	6.3	37	230	45
70A7	3	70	23	345	678
(Shows Short on 1)					
70A7 Test 2	3	70	20		167
(Allow Tube to Heat Up, Return Levers 6 & 7 to "U" Position. Good Tube Will Kick to 70).					
70L7	3	70	25	345	67
70L7 Test 2	3	70	20	8	17
71A	3	5	47	23	4
75	1	6.3	20	20	56
75 Test 2	1	6.3	38	3	56
75 Test 3	1	6.3	38	4	56
76	2	6.3	33	23	45
77	2	6.3	30	230	456
78	3	6.3	31	230	456
79	3	6.3	30	23	46
79 Test 2	3	6.3	30	50	46
80	3	5	55	2	4
80 Test 2	3	5	55	3	4
81	3	7.5	75	2	4
82	3	2.5	24	2	4
82 Test 2	3	2.5	24	3	4
82V	3	2.5	24	2	4
82V Test 2	3	2.5	24	3	4
83	3	5	26	2	4
83 Test 2	3	5	26	3	4
83V	3	5	24	2	4
83V Test 2	3	5	24	3	4
84	3	6.3	26	2	45
84 Test 2	3	6.3	26	3	45
85	3	6.3	45	20	56
85 Test 2	1	6.3	47	3	56
85 Test 3	1	6.3	47	4	56
86M	3	6.3	37	35	78
87S	2	6.3	33	230	456
88	3	5	26	2	4
88 Test 2	3	5	26	3	4
88M	3	6.3	31	340	578
88S	3	6.3	32	230	456
89	3	6.3	32	230	56
89RS	3	6.3	36	20	357
89RS Test 2	1	6.3	24	4	37
89RS Test 3	1	6.3	24	6	37
95	3	2.5	36	234	56

TUBE CHART

TUBE TYPE	KNOBS A Cir	B Fil	C Load	LEVER POSITION U Up	D Down
98	3	6.3	26	2	45
98 Test 2	3	6.3	26	3	45
99	2	3.3	55	23	4
113HY/123HY	1	1.4	45	23	5
114HY	3	1.4	55	0	7
(Short Top Caps Together)					
115HY/145HY	1	1.4	45	234	5
117L7	3	110	25	345	78
117L7 Test 2	3	110	20	6	17
117M7	3	110	23	345	78
117M7 Test 2	3	110	21	6	17
117N7	3	110	20	345	678
117N7 Test 2	3	110	15		78
(Allow Tube to Heat Up. Return Lever 7 to "U" Position. Good Tube Will Kick to 70.)					
117P7	3	110	22	345	678
117P7 Test 2	3	110	15		78
(Allow Tube to Heat Up. Return Lever 7 to "U" Position. Good Tube Will Kick to 70.)					
117Z3	3	110	24	15	46
117Z4	3	110	19	5	78
117Z6	3	110	20	3	47
117Z6 Test 2	3	110	20	5	78
123HY/113HY	1	1.4	45	23	5
125HY/155HY	2	1.4	45	234	5
145HY/115HY	1	1.4	45	234	5
155HY/125HY	2	1.4	45	234	5
182-B	3	5	37	23	4
183	3	5	40	23	4
201-B	2	5	45	23	4
201-C	2	5	45	23	4
427	3	2.5	44	23	45
482-A	3	5	47	23	4
482-B	3	5	37	23	4
483	3	5	40	23	4
484	3	2.5	32	23	45
485	2	2.5	33	23	45
486	2	3.3	48	23	45
501	1	1.4	35	234	5
501X	1	1.4	35	345	7
502	1	1.4	35	234	5
502AX	1	1.2	30	124	5
502X	1	1.4	35	345	7
503	1	1.4	35	234	5
503AX	1	1.2	30	124	5
503X	1	1.4	35	345	7
504	1	1.4	35	234	5
504X	1	1.4	35	345	7
506AX	1	1.2	30	124	5
507AX	1	1.2	30	124	5

TUBE TYPE	KNOBS A Cir	B Fil	C Load	LEVER POSITION U Up	D Down
518AX	1	1.2	30	124	5
520AX	1	1.2	30	124	5
521AX	1	1.2	30	124	5
522AX	1	1.2	30	124	5
585	3	7.5	42	23	4
586	3	7.5	42	23	4
615HY	3	6.3	33	0	7
(Short Top Caps Together)					
800	3	7.5	54	0	4
(Short Top Caps Together)					
801	3	7.5	42	23	4
802	3	6.3	29	340	567
807	3	6.3	25	230	45
809	3	6.3	27	30	4
812	3	6.3	29	30	4
837	3	12.6	25	340	567
840	2	2	33	230	45
841	3	7.5	45	23	4
842	3	7.5	54	23	4
864	1	1.4	55	23	45
865	3	7.5	80	230	4
866 (A)	3	2.5	25	0	4
879	4	2.5	52	0	4
884	4	6.3	20	35	78
885	4	2.5	20	23	45
950	3	2	46	234	5
951	2	2	40	230	4
954	2	6.3	32	3450	78
(Use Adapter BN)					
955	2	6.3	30	45	78
(Use Adapter BN)					
956	2	6.3	30	3450	78
(Use Adapter BN)					
957	1	1.2	30	45	78
(Use Adapter BN)					
958	1	1.2	30	45	78
(Use Adapter BN)					
959	1	1.2	34	3450	78
(Use Adapter BN)					
986	3	5	26	2	4
986 Test 2	3	5	26	3	4
1003	4	Off	22	5	38
1003 Test 2	4	Off	32	3	58
1201	2	6.3	34	1357	468
1203	1	6.3	33	4	78
1204	2	6.3	26	135	4678
1221	1	6.3	22	230	456
1223	1	6.3	22	340	578
1231	2	6.3	23	236	478
1232	2	6.3	24	236	478

TUBE CHART

TUBE TYPE	KNOBS A Cir	B Fil	C Load	LEVER POSITION U Up	D Down
1267	4	Off	31	5	**27**
1273	3	12.6	26	236	47**8**
1280	3	12.6	26	236	47**8**
1284	3	12.6	25	236	47**8**
1291/3B7	1	1.5	33	23	**18**
1291/3B7 Test 2	1	1.5	33	67	**18**
1293	2	1.4	32	26	**8**
1294/1R4	1	1.5	57	4	7**8**
1299/3D6	2	1.5	25	236	**18**
1603	1	6.3	23	230	45**6**
1608	3	2.5	24	23	**4**
1610	3	2.5	28	234	**5**
1612	3	6.3	25	40	**7**8
1614	3	6.3	24	345	**7**8
1616	3	2.5	57	0	**4**
1619	3	2.5	29	345	**7**8
1620	1	6.3	22	340	**7**8
1621	3	6.3	40	345	**7**8
1622	3	6.3	27	345	**7**8
1624	3	2.5	26	230	**5**
1625	3	12.6	25	340	6**7**
1626	3	12.6	32	35	**7**8
1629	2	12.6	36	35	**7**8
1629 Eye CL	4	12.6	0	34	5**7**8
1629 Eye OP	4	12.6	0	4	35**7**8
1631	3	12.6	27	345	**7**8
1632	3	12.6	22	345	**7**8
1633	2	25	28	12	3**7**
1634	1	12.6	20	23	6**7**
1851	3	6.3	20	340	5**7**8
1852	3	6.3	21	468	35**7**
1853	3	6.3	23	468	35**7**
2050	3	6.3	15	35**6**	**7**8
2051	3	6.3	19	35**6**	**7**8
7700	1	6.3	20	230	45**6**
8016	1	1.2	98	0	1**3**456**78**
(Good Tube Reads 10)					
(For element test, use levers "7" & "0" **only**.)					
9001	1	6.3	20	156	**247**
9002	2	6.3	27	**15**6	**247**
9003	2	6.3	27	156	**247**
9004	1	6.3	20	4	**57**
(Use Adapter BN)					
9005	1	3.3	34	5	4**78**
(Use Adapter BN)					
9006	1	6.3	25	**15**	**247**
AF	3	2.5	24	2	**4**
AF Test 2	3	2.5	24	3	**4**
AG	3	5	26	2	**4**

TUBE TYPE	KNOBS A Cir	B Fil	C Load	LEVER POSITION U Up	D Down
AG Test 2	3	5	26	3	**4**
CK-1005	4	6.3	22	5	3**8**
CK-1005 Test 2	4	6.3	22	3	5**8**
G-2	1	2.5	45	3	4**5**
G-2 Test 2	1	2.5	45	2	4**5**
G-4	1	2.5	45	3	4**5**
G-4 Test 2	1	2.5	45	2	4**5**
G-84	3	2.5	56	2	**4**
GA	3	5	32	234	**5**
KR-1	3	6.3	24	2	3**4**
KR-5	3	6.3	36	234	**5**
KR-25	3	2.5	36	234	5**6**
KR-98	3	6.3	26	2	4**5**
KR-98 Test 2	3	6.3	26	3	4**5**
PZ	3	2.5	41	234	**5**
PZH	3	2.5	36	234	5**6**
R-30	2	2	35	23	**4**
R-100	3	7.5	43	0	**4**
(Short Top Caps Together)					
R-200	3	7.5	40	0	**4**
(Filament Connected from 1 & 4 on 4 Pin Tester Socket to 2 & 4 Pin of Tube—Short Top Caps Together and Connect to Top Cap Lead.)					
RK-33	3	6.3	27	45	6**7**
RK-33 Test 2	3	6.3	27	30	2**7**
RK-34	3	6.3	27	50	4**7**
(Top Cap Lead on Left Top Cap)					
RK-34 Test 2	3	6.3	27	30	4**7**
(Top Cap Lead on Right Top Cap)					
VR-75	4	Off	30	5	2**37**
(Good Tube Reads 10)					
VR90-30	4	Off	30	5	237
(Good Tube Reads 10)					
VR-105	4	Off	30	5	2**37**
(Good Tube Reads 10)					
VR-150-30	4	Off	30	5	237
(Good Tube Reads 10)					
WX-12	1	1.4	55	23	**4**
WND. A	3	6.3	35	23	45**6**
WND. C	3	2.5	35	23	45**6**
X99	2	3.3	55	23	**4**
XXB	2	1.4	40	34	**18**
XXB Test 2	2	1.4	40	56	**18**
XXD	3	12.6	25	34	2567**8**
XXD Test 2	3	12.6	25	56	2347**8**
XXFM	1	6.3	20	23	4**78**
XXFM Test 2	1	6.3	27	5	4**8**
XXFM Test 3	1	6.3	27	6	7**8**
XXL	2	6.3	24	26	7**8**

REPLACEABLE PARTS, 68 NRI

Ref. No.	Quan.	Part Name	Description	Function	Part No.
C1	1	Capacitor	.1 Mfd. 400 DC WV	Series Capacitor Short Test	T-2631-P27
G	1	Lamp	Neon, 1/25W, GE	Short Test	T-3024-2
M	1	Instrument	1 Ma. 100 Mv. 327-T	Indication	T-52-288
R1	1	Resistor	Composition, 100K Ohm, ±20%, 1/10W	Current Limiting Neon	T-2602-1/10-100K
R2	1	Resistor	Composition, 250K Ohm, ±10%, ½W	Shunt, Neon, Calib.	T-2601-½-250K
R3	1	Resistor	Wirewound, 50 Ohm, ±1%	Cathode Return Coupling	T-15-1248
R4	1	Resistor	Variable, 200 Ohm, 5% Tol.	Load Control	T-16-30
R5	1	Resistor	Wirewound, 450* Ohm, ±1%	Tube Test Shunt Res.	T-15-1249
R6	1	Resistor	Wirewound, 1800* Ohm, ±1%	Tube Test Shunt Res.	T-15-1251
R7	1	Resistor	Composition, 2500 Ohm, ±5%, 10W	Current limiting	T-15-873
R8	1	Resistor	Composition, 5K Ohm, ±1%, ½W	Current limiting	T-15-1009
R9	1	Resistor	Composition, 1K Ohm, ±1%, ½W	Current limiting	T-15-1011
R10	1	Resistor	Wirewound, 1200* Ohm, ±1%	Line Meter Calib.	T-15-1250
R11	1	Resistor	Composition, 75K Ohm, ±1%, 1W	Line Meter Series	T-15-970
R12	1	Resistor	Variable, 175 Ohm, Model B, Ohmite with off position	Line Control	T-16-29
S1	1	Switch	14 Pos., 2 Deck, 4 Active Pos.	Circuit Switch	T-22-81
S2	1	Switch	3 Pos., 1 Deck	Test Switch	T-22-43
S3	1	Switch	20 Pos., 1 Deck	Filament Switch	T-22-35
S4	10	Switch	3 Pos., Lever, 1 Deck	Element Switch	T-22-56
T	1	Transformer	110 V, Pri., 22 Sec. taps	Filament & Plate Voltage Supply	T-23-41
X	1	Rectifier	Copper oxide, ½ Wave, B/1, Schauer, 2 Lead	Line Meter Rect.	T-2248-1
	1	Case	With Hardware	Tester Housing	T-10-765
	1	Cord	Line, 7 ft., black	Connector	T-2566-11-7
	10	Knob	9/16D Round, Black	Element Switch Knob	T-34-7
	2	Knob	1¼" bar, black	Switch Knobs	5804
	3	Knob	1¼", bar red	Switch Knobs	T-34-8
A1	1	Socket	7 prong with pilot socket, black, Amphenol S-7C	Tube Socket	T-2455-48
	1	Socket	Bantam, 6 prong, black, Amphenol 78-6H	Tube Socket	T-2455-58
	1	Socket	9 prong, black, Amphenol 78-A9P	Tube Socket	T-2455-96
	1	Socket	4 prong, black, Amphenol S-4	Tube Socket	T-2455-4
	1	Socket	5 prong, black, Amphenol S-5	Tube Socket	T-2455-5
	1	Socket	6 prong, black, Amphenol S-6	Tube Socket	T-2455-6
	1	Socket	Loctal, 8 hole, black, Amphenol 78-8L	Tube Socket	T-2455-8L
	1	Socket	Miniature, 7 prong, black, Amphenol 78-7P	Tube Socket	T-2455-59
	1	Socket	Octal, 8 hole, black Amphenol S-8	Tube Socket	T-2455-8
	1	Socket	Subminiature 5, 6 & 7 prong	Tube Socket	T-2455-80

* Approx. value calibration resistor

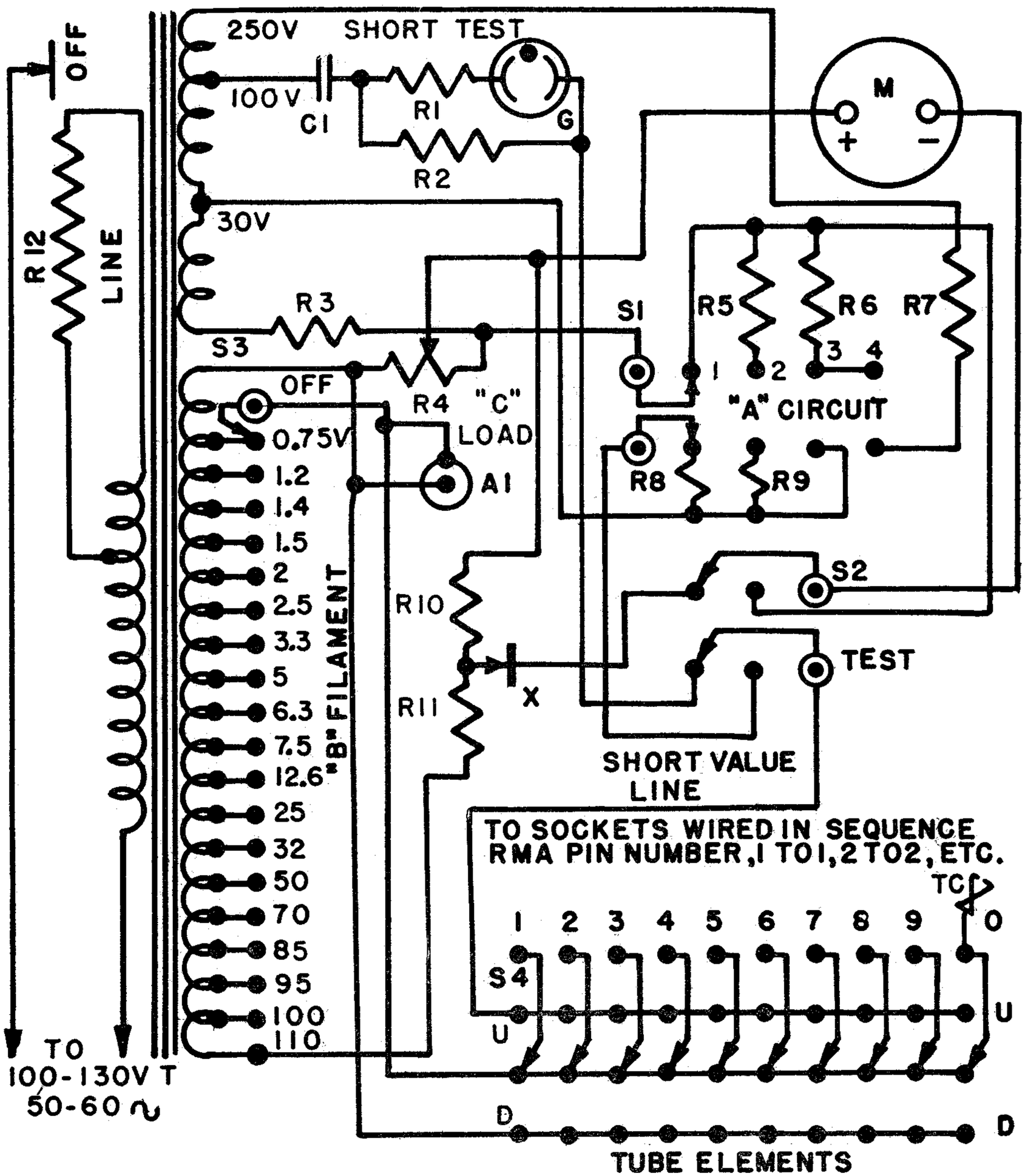

WIRING DIAGRAM